MAGNUM
INDUSTRIAL

MODEL NO.: MI-81200、MI-81250

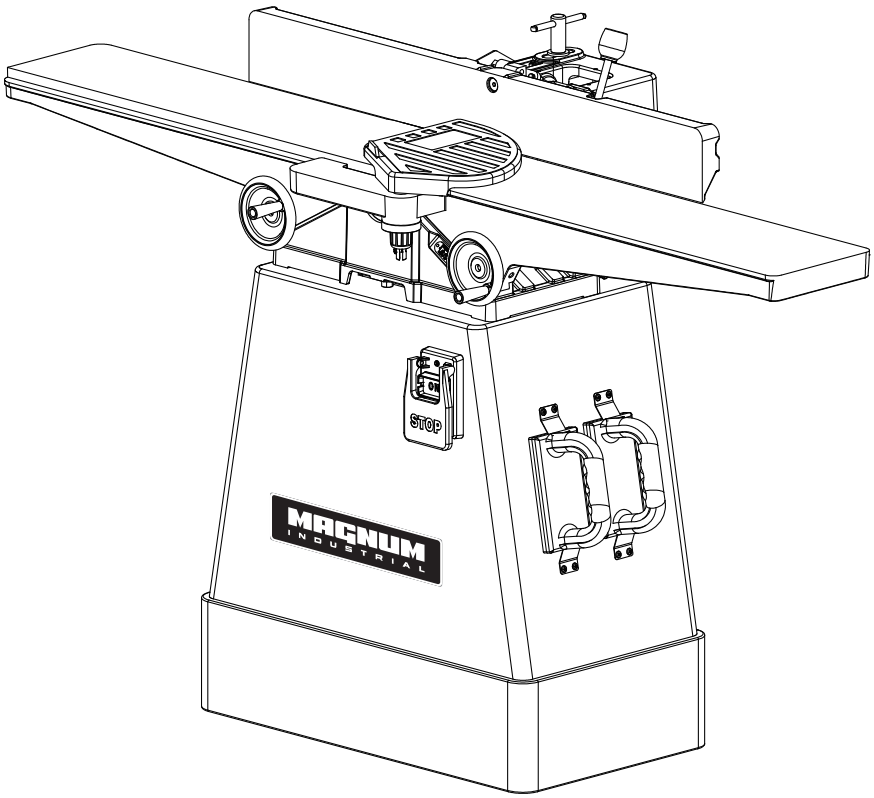

OPERATING MANUAL

SAFETY INSTRUCTIONS

For Your Safety Read Instruction Manual Before Operating Jointer
As with all machines, there is a certain amount of hazard involved with the use of this jointer. Use the machine with the respect and caution demanded where safety precautions are concerned. When normal safety precautions are overlooked or ignored, personal injury to the operator can result.

Wear eye protection.

Always keep cutter head and drive guards in place and in proper operating condition. Do not remove guard for rabbeting operations.
Never make jointing , planning, or rabbeting cut deeper than 1/8 in.
Always use hold-down/push blocks for jointing material narrower than 3 inches, or planning material thinner than 3inches.
Never perform jointing. Planning, or rabbeting cuts (with jointers provided with a rabbeting guard) on pieces shorter than 8 inches (203 mm) in length.
Keep guards in place and in working order.
Remove adjusting keys and wrenches. Form habit of checking to see that keys and adjusting wrenches are removed from tool before turning it on .
Keep work area clean. Cluttered areas and benches invite accidents.
Don't use in dangerous environment. Don't use power tools in damp or wet locations, or expose them to rain. Keep work area well lighted.
Keep children away. All visitors should be kept safe distance from work area.
Make workshop kid proof with padlocks, master switches, or by removing starter keys.
Don't force tool. It will do the job better and safer at the rate for which it was designed.
Use right tool. Don't force tool or attachment to do a job for which it was not designed.
Use proper extension cord. Make sure your extension cord is in good condition. When using an extension cord, be sure to use one heavy enough to carry the current your product will draw. An undersized cord will cause a drop in line voltage resulting in loss of power and overheating Table (see Figure 9) shows the correct size to use depending on cord length and nameplate ampere rating. If in doubt, use the next heavier gage. The smaller the gage number, the heavier the cord.
Wear proper apparel. Do not wear loose clothing, gloves, neckties, rings, bracelets, or other jewelry which may get caught in moving parts. Nonslip footwear is recommended. Wear protective hair covering to contain long hair.
Always use safety glasses. Also use face or dust mask if cutting operation is d usty. Everyday eyeglasses only have impact resistant lenses, they are NOT safety glasses.
Secure work. Use clamps or a vise to hold work when practical. It's safer than using your hand and it frees both hands to operate tool.
Don't overreach. Keep proper footing and balance at all times.
Maintain tools with care. Keep tools sharp and clean for best and safest performance. Follow instructions for lubricating and changing accessories.
Disconnect tools before servicing; when changing accessories, such as blades, bits, cutters, and the like.
Reduce the risk of unintentional starting. Make sure switch is in off position before plugging in.
Use recommended accessories. Consult the owner's manual for recommended accessories. The use of improper accessories may cause risk of injury to persons.
Never stand on tool. Serious injury could occur if the tool is tipped or if the cutting tool is unintentionally contacted.
Check damaged parts. Before further use of the tools, a guard or other part that is damaged should be carefully checked to determine that it will operate properly and perform its intended function – check for alignment of moving parts, binding of moving parts, breakage of parts, mounting , and any other conditions that may affect its operation. A guard or other part that is damaged should be properly repaired or replaced.
Direction of feed. Feed work into a blade or cutter against the direction of rotation of the blade or cutter only.
Never leave tool run ning unattended. Turn power off. Don't leave tool until it comes to a complete stop.
Do not perform jointing operation on material shorter than 8 in , narrower than 3/4 in, or less than 1/4 in thick.

Do not perform planning operation on material shorter than 8 in , narrower than 3/4 in, or wider than 6” in or thinner than 1/2 in.
Maintain the proper relationships of infeed and outfeed table surfaces and cutter head knife path.
Support the work piece adequately at all times during operation; mqintain control of the work at all times.
Do not back the work toword the infeed table.
Do not attempt to perform an abnormal or a l ittle-used operation without study and the use of adequate hold-down/push blocks, jigs, fixtures, stops and the like.
Hand safety. It is good practice to move the hands in an alternate motion from back to front as the work continues through the cut. Never pass the hands directly over the cutter knife. As one hand approaches the knives remove it from the stock in an arc motion and place it back on the stock in a position beyond the cutterknife.

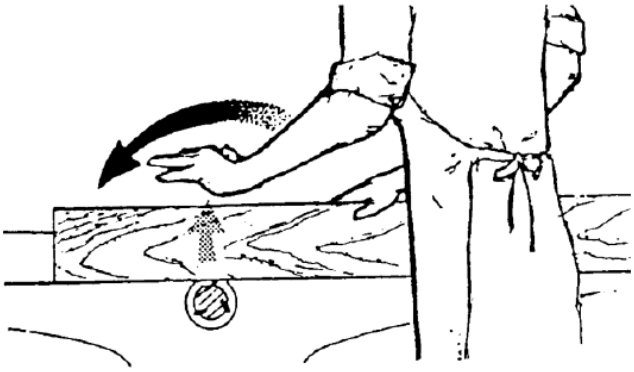

Three inch rule. When working a piece of wood on the jointer, follow the 3 inch radius rule. The hands must never be closer than 3 inches to the cutter head.
Health hazards. Some dust created by power sanding, sawing, grinding, drilling and other construction activities contains chemicals known to cause cancer, birth defects or other reproductive harm. Some examples of these chemicals are:
* Lead from lead-based paint.
* Crystalline silica from bricks and cement and other masonry products.
* Arsenic and chromium from chemically-treated lumber.

Your risk from these exposures varies, depending on how often you do this type of work. To reduce your exposure to these chemicals, work in a well-ventilated area, and work with approved safety equipment, such as those dust masks that are specifically designed to filter out microscopic particles.

Familiarize yourself with the following safety notices used in this manual:

CAUTION : (This means that if precautions are not heeded, it may result in minor or moderate injury and/or possible machine damage)

WARNING: (This means that if precautions are not heeded, it could result in serious injury or possibly even death).

Assembly

Unpacking and Cleanup

1. Carefully finish removing all contents from both shipping cartons. Compare contents of the shipping cartons with the list of contents above. Place parts on a protected surface.
2. Set packing material and shipping cartons to the side. Do not discard until machine has been set up and is running properly.
3. Clean all rust protected surfaces (bed, fence, etc.) with kerosene or diesel oil. Do not use gasoline, paint thinner, mineral spirits, etc. These may damage painted surfaces.

WARNING **Cutterhead knives are dangerously sharp! Use extreme caution when cleaning.**

4. Apply a thin layer of paste wax to the bright surfaces of the fence and tables to prevent rust.

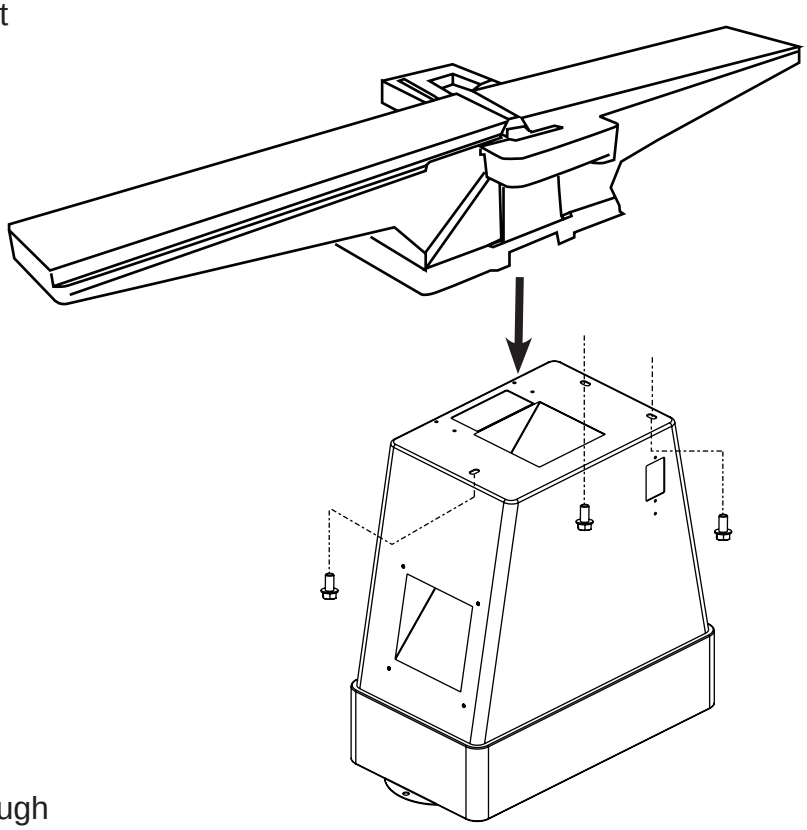

Fig 1

Installing Bed to Stand

Referring to Figure 1:

1. Place bed assembly on top of stand . Be sure the identification label on the bed faces the same direction as the switch on the stand.
2. Line up two holes in the stand top with holes in the bed assembly by viewing through the access door in rear side of the stand.
3. Attach stand to bed assembly by using two 3/8" lock bolts and lock washers (Fig 2). Hand tighten only at this time.
4. Line up the third hole in the stand with the hole in the bed assembly by viewing through the dust chute .
5. Install the third 3/8" lock bolt and lock washer through the dust chute to secure the bed to the stand.
6. Tighten all three lock bolts with a 14mm wrench.

Fig 2

Installing Fence to Bed

Referring to Fig 3:

1. Take the lock handle (E), flat washer (F), and lock nut (G) from the carton.
2. Place the fence assembly (A) onto the table (B). Be sure the key stock (D) on the bed lines up with the channel (C) in the fence casting.
3. Place the flat washer (F) on hole (H)*; insert the lock handle (E) through the fence casting and the table casting.
4. Thread the lock nut (G) onto the lock handle (E). Make sure the tab on the nut faces up and engages the slot in the table casting.
5. Screw the fence tilt lever into the threaded hole in the fence B.

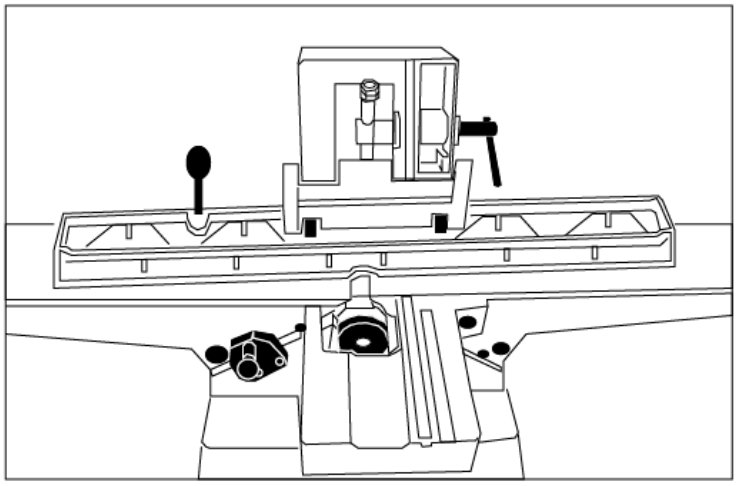

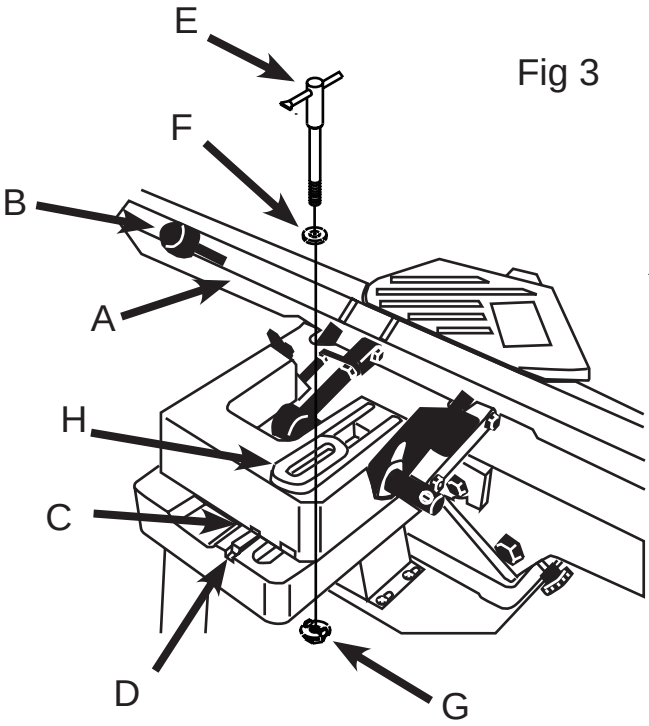

Fig 3

Installing the Drive Belt

Referring to Fig 4:

1. Place V-belt (A) onto cutterhead pulley (B) and through opening in stand.
2. Pull V-belt down and place onto motor pulley (C).

Note: If the belt is difficult to roll on the pulley, loosen the motor mounting screws.

3. Check to make sure that motor pulley and cutterhead pulley are vertically aligned and the V-belt does not contact the sides of the opening in the base. If the pulleys are not aligned, remove belt and adjust the motor pulley in or out on the motor shaft and then reattach the belt.
4. The V-belt is properly tensioned when finger pressure on the belt half way between the two pulleys causes 1/2" deflection (Fig 5). If the belt is too loose, loosen the four motor mount bolts, push down on the motor to tension the Vbelt, and tighten the mounting bolts.
5. A new belt may have a tendency to stretch slightly until broken in. After two hours of operation, check belt tension again. Readjust the tension if necessary.

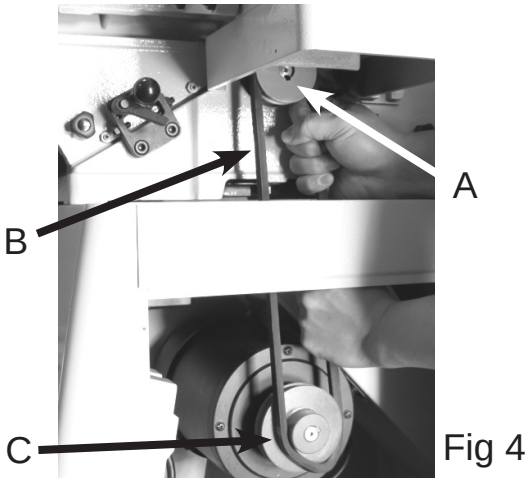

Fig 4

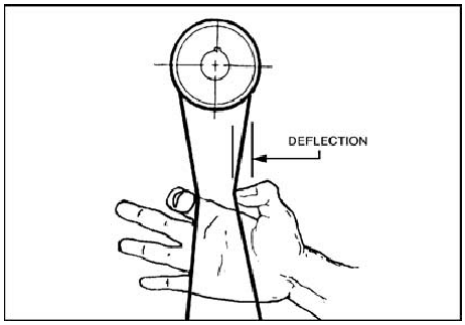

Fig 5

INSTALL THE CUTTER HEAD GUARD - ALL MODELS

Tension is maintained on the cutter head guard using a spring loaded knob on the underside of the rabbetting arm. The tension causes the guard to automatically snap back against the fence and cover the knives once the workpiece has cleared the guard.

To install the guard:

1. Remove the set screw A on the guard shaft B.
2. Turn and hold the tension adjustment knob and fit the shaft as far as it will go down into the mounting hole on the rabbeting arm at the front of the jointer C.
3. To test the tension, pull back on the guard bringing it away from the table and release.
4. If you find the tension on the guard does not snap the guard back firmly enough, hold the tension adjustment knob and remove the guard.
5. Turn the tension adjustment knob another 1/2 turn and re-install the guard.
6. Test the tension again and repeat steps 4 and 5 until adequate tension is achieved.
7. To secure the guard in place, tighten the stopscrew on the bottom of the shaft D.

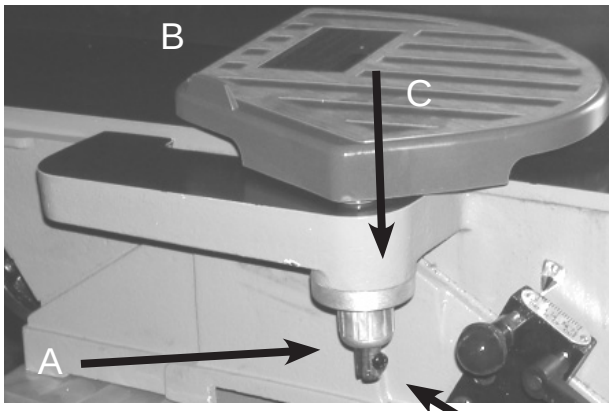

Fig 6

INSTALL BASE DOOR

Attach the base door to the base using 4 x mm Phillips screws and flat washers.

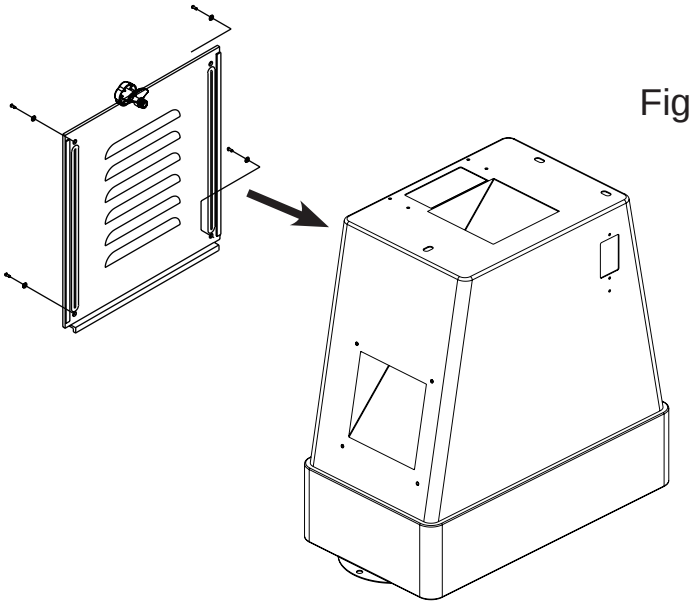
Fig 7

INSTALL THE DUST PORT

Attach the dust port to the right side of the base using small Phillips screws with small flat washers as shown.

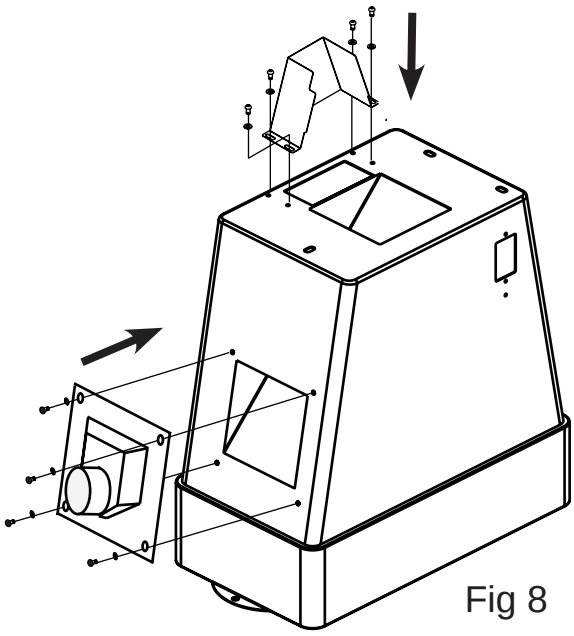
Fig 8

INSTALL THE TABLE HEIGHT ADJUSTMENT HANDWHEELS

1. Fit the two table height adjustment handwheels on the shafts at the front of the machine. The slots in the handwheel must be aligned with the spring pin on the shaft, Fig 9.
2. Using the supplied 3 mm Allen key, tighten the set screw on the shaft to secure the handwheels to the shaft, Fig 10.

Fig 9

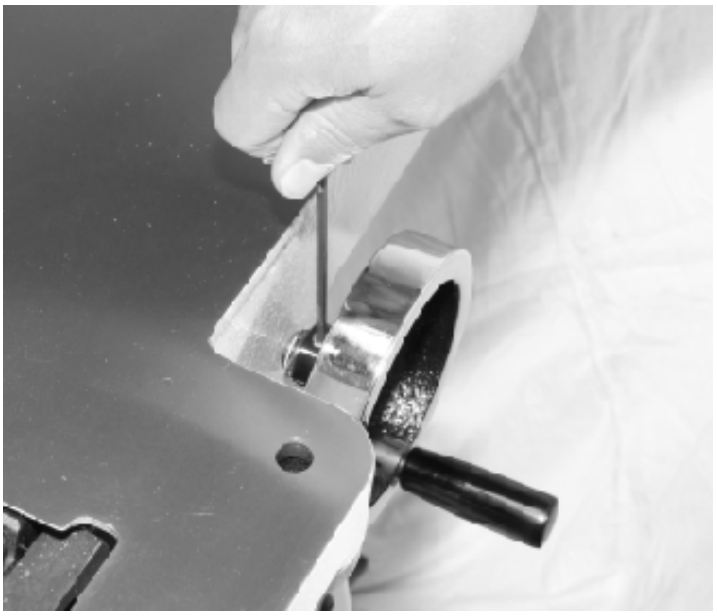

Fig 10

Basic Operations

Before making any cuts on the stock, make a few practice cuts by raising the infeed table to “ 0" and with the power disconnected. In this manner you will acquaint yourself with the feel of jointer operations.

Surfacing

Adjust depth of cut. It is better to make cuts of approximately 1/64 inch. This will enable you to have better control over the material being surfaced. Make several passes if necessary to obtain proper stock removal.

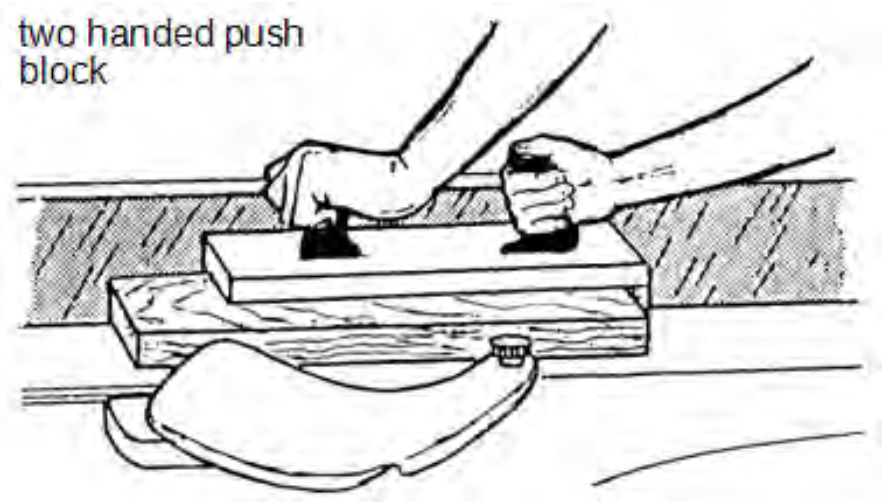

Fig 11

Never surface pieces shorter than 12 inches or thinner than 3/8 inch without the use of a special work holding fixture. Never surface pieces thinner than 3 inches without the use of a push block. On stock 8" to 12" long use a single two-handed push block (Fig. 11). On stock longer than 12 inches use two push blocks (Fig. 12). With narrow stock use the type push block shown in Fig. 13. When surfacing short stock over 4 inches wide, use two (2) push blocks to guide material over cutterhead (Fig. 14).

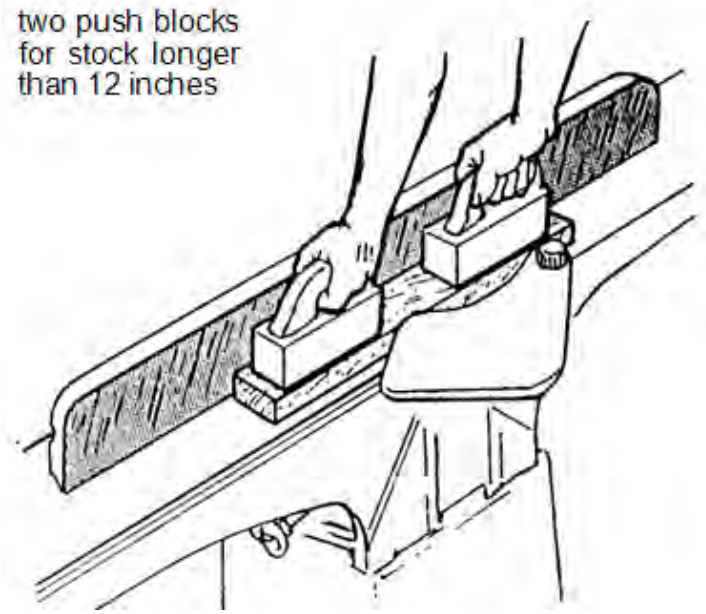

Fig 12

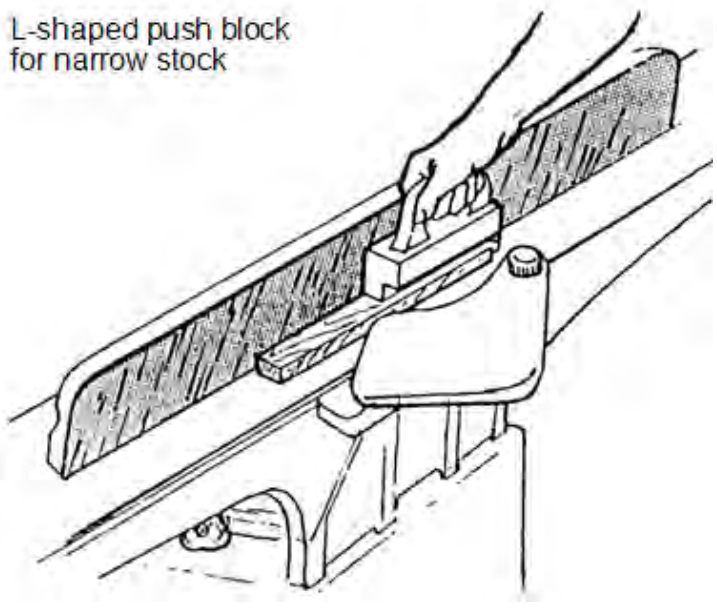

Fig 13

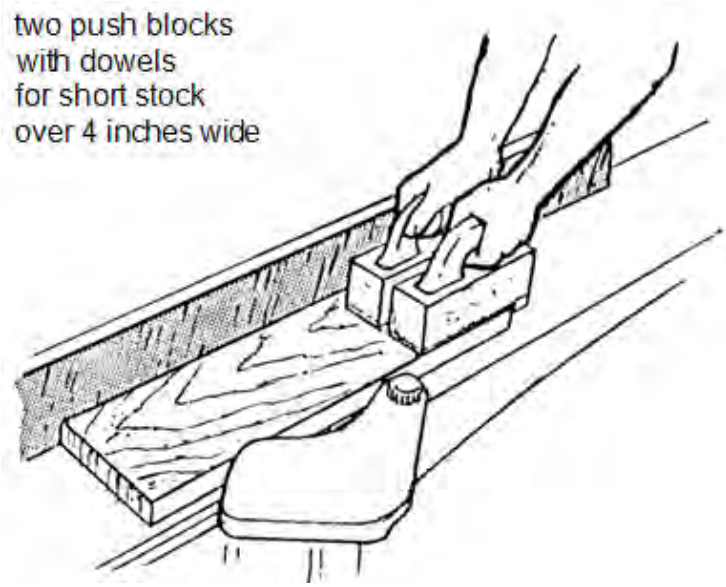

Fig 14

Surfacing: Long Boards

The use of push blocks will help to insure against hands coming in contact with cutterhead in the event of a kickback and as trailing end of board passes over cutterhead.

When surfacing long s tock, p lace push block near the front of piece and start feeding wood with the right hand until guard has opened and cut is started (Fig. 26).

Place second push block near the rear of infeed table and continue feeding stock using the hand over hand method (Fig. 16).

Before the left hand is in the 3 inch area of the cutterhead move it over to the outfeed side (Fig. 17).

As soon as possible follow with the right hand over to the outfeed side and continue through with cut (Fig.18).

Begin by feeding stock with right hand and apply pressure to front of stock with push block.

When the stock is longer than twice the length of the infeed and outfeed tables, another helper or support table must be used to support the stock.

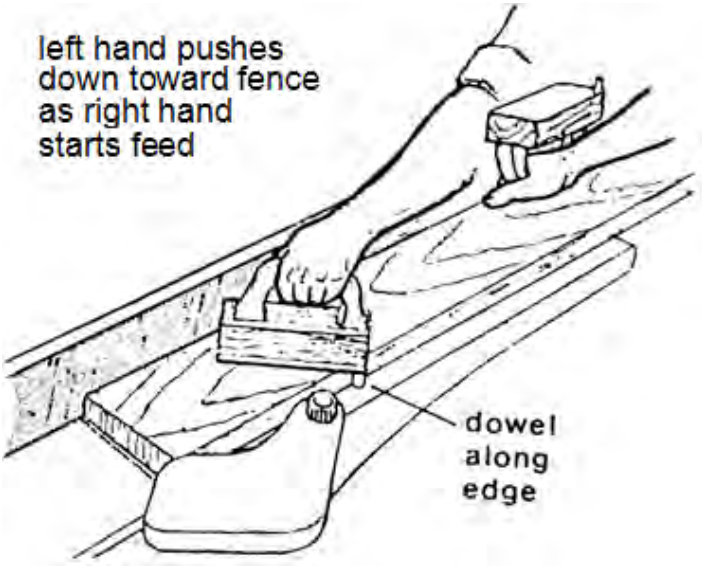

Fig 15

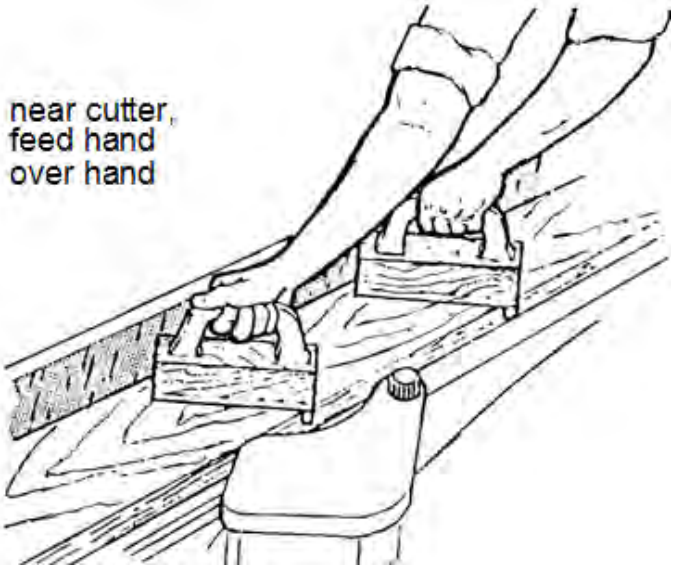

Fig 16

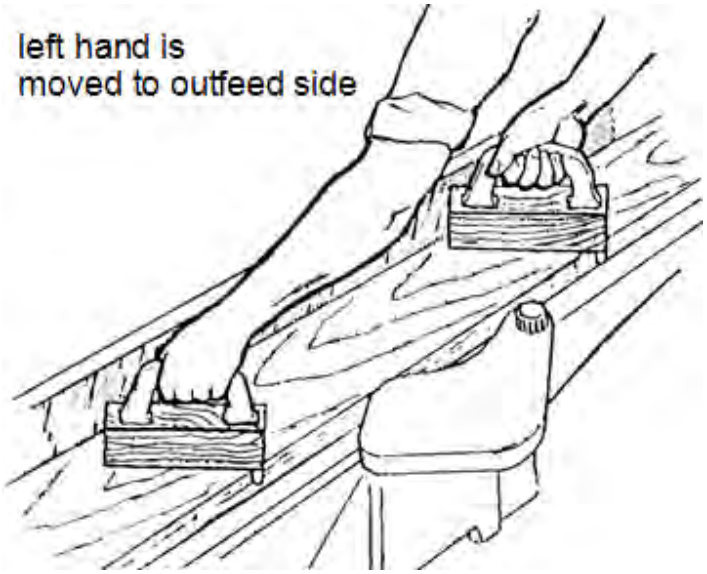

Fig 17

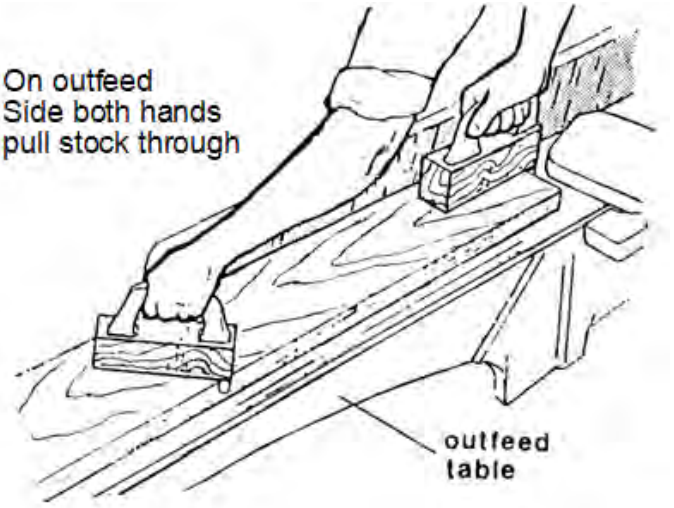

Fig 18

Jointing (or Edging)

Never edge a board that is less than 3 inches wide, less than 1/4 inch thick, or 12 inches long, without using a push block.

CAUTION: When workpiece is twice the length of the jointer infeed or outfeed table use an infeed or outfeed support .

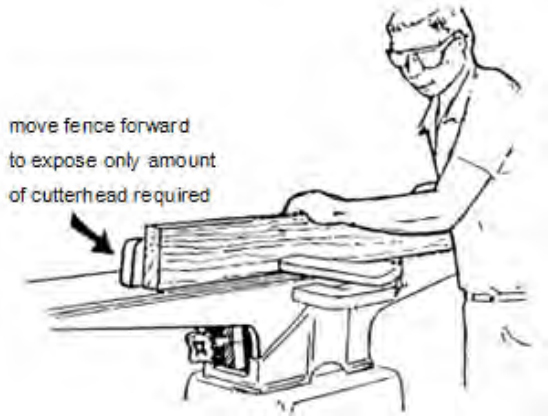

Fig 19

Begin by feeding stock with right hand and apply pressure to front of stock with push block.
When edging, make cuts of approximately 1/16 inch for hardwood and 1/8 inch for softwood.

When edging wood wider than 3 inches lap the fingers over the top of the wood, extending them back over the fence such that they will act as a stop for the hands in the event of a kickback.
Keep stock against the fence (Fig. 19).

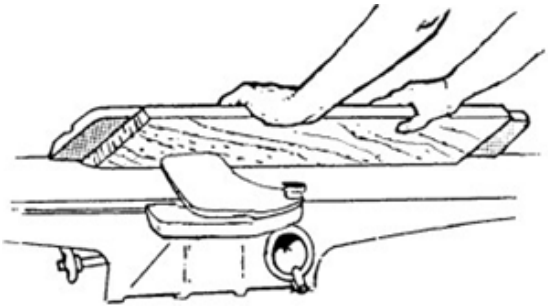

Fig 20

Beveling

When beveling never make cut deeper than 1/16 inch. Make certain material being beveledis over 12 inches long, more than 1/4 inch thick and 1 inch wide. Set fence to desired angle.

CAUTION: Although fence may be tilted in or out for bevel cut, We recommends for safety reasons the fence be tilted in, if possible, making a cradled cut (Fig. 20).

For wood wider than 3 inches, hold with fingers close together near the top of the stock, lapping over the board and extending over the fence. When beveling material less than 3 inches wide, use beveled push blocks and apply pressure toward the fence.
Keep fingers near top of push block (Fig. 21).
When beveling short material use one bevel hold down and apply pressure toward the fence.
Keep thumb above the ledge on hold down block (Fig. 22).

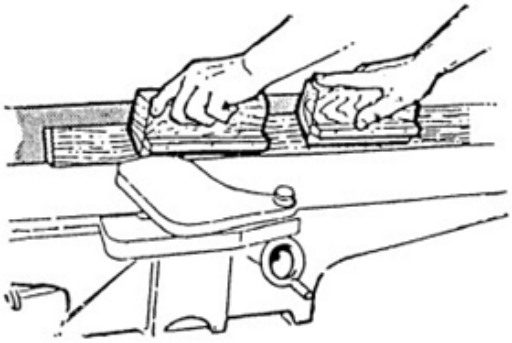

Fig 21

Cross Grain

NOTE: When beveling around four edges of a workpiece, make cross grain cuts first. This will help clean up any chipping or splintering when beveling the end grain.
For long boards, follow the same hand-over-hand procedure used for surfacing long boards.

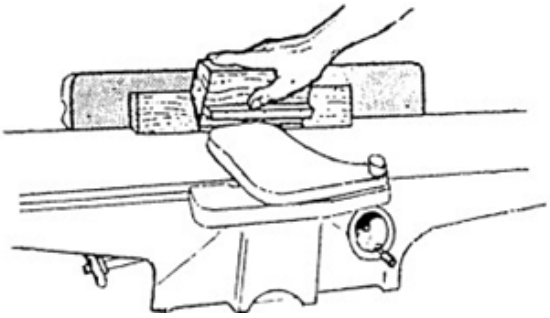

Fig 22

Skewing (Shear Cutting)
When edging or facing burl or birds-eye maple, it is not unusual to deface or mar the surface being finished. This is caused by the cutterhead blades at times cutting against the grain. In order to prevent the defacing or marring of this type wood, it is necessary to skew, or angle finish, the material being worked. See

1. Release the fence locking handle and remove the two hex nuts and flat washer holding the fence to the fence support. Remove the fence.

2. Remove the key from the fence slide base.

3. Replace the fence assembly at the desired angle across the cutterhead. Secure the fence to the support with the two hex nuts and flat washer, then tighten the fence locking handle.

Push Blocks
Push blocks are simple, yet necessary tools to assist the operator especially when jointing thin or short stock. Illustrated in Fig. 36 are three types of push blocks commonly used in jointing. Push blocks may be obtained commercially or easily constructed.

Note: The Jointer is supplied with two push block for feeding stock as below showing

Fig 24

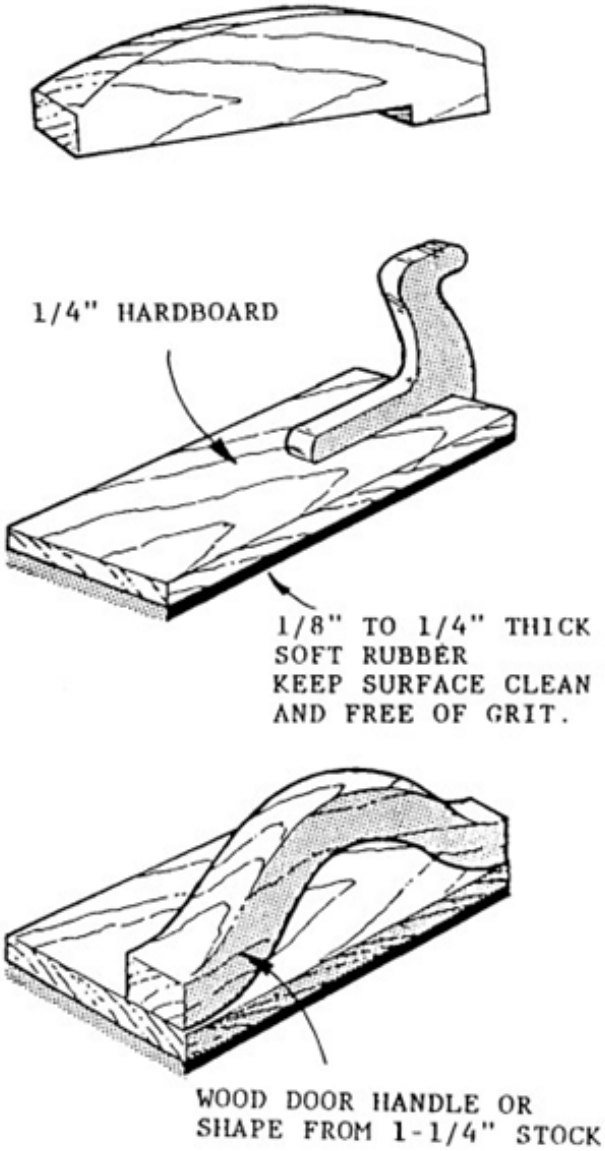

Fig 23

PARTS LIST FOR MI-81200

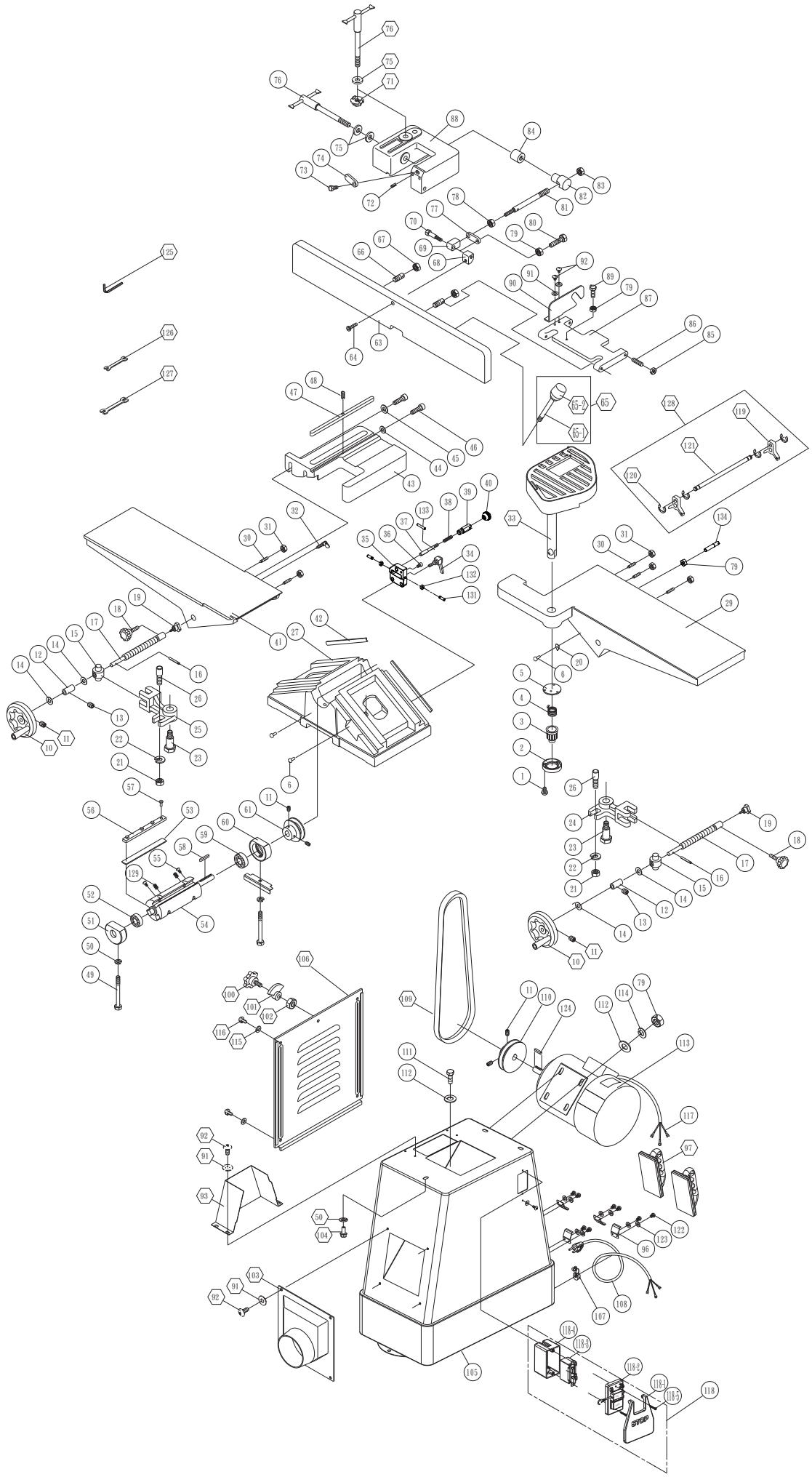

PARTS LIST FOR MI-81200

ITEM NO.	DESCRIPTION	SPECIFICATION	QTY
MI-81200-01	PHILLIPS HEAD SCREW	5/32"-32NCX5/8"	3
MI-81200-02	RETAINER		1
MI-81200-03	SPRING KNOB		1
MI-81200-04	SPRING		1
MI-81200-05	RETAINING WASHER		1
MI-81200-06	RIVET	2X5	5
MI-81200-10	HANDWHEEL		2
MI-81200-11	SET SCREW	1/4"-20NCX3/8"	4
MI-81200-12	BUSHING		2
MI-81200-13	SET SCREW	5/16"-18NCX3/8"	2
MI-81200-14	FLAT WASHER	10X22X0.8T	4
MI-81200-15	ADJUSTING NUT		2
MI-81200-16	SPRING PIN	3X25	2
MI-81200-17	LEAD SCREW		2
MI-81200-18	KNOB		2
MI-81200-19	KNOB		2
MI-81200-20	POINTER		1
MI-81200-21	HEX. NUT	1/2"-12NC(19.05BX11.11H)	2
MI-81200-22	LOCK WASHER	13X22.7	2
MI-81200-23	PIVOT PIN		2
MI-81200-24	FRONT BALL CRANK		1
MI-81200-25	REAR BALL CRANK		1
MI-81200-26	SHOULDER PIN		2
MI-81200-27	BASE		1
MI-81200-29	IN-FEED TABLE		1
MI-81200-30	SET SCREW		5
MI-81200-31	HEX. NUT	1/4"-20NC(11BX5.5H)	5
MI-81200-32	LOCK SCREW	7/8" X 1/4" -20NC X 1"	2
MI-81200-33	CUTTER GUARD		1
MI-81200-34	LOCK LEVER		1
MI-81200-35	FIXED PLATE		1
MI-81200-36	CAP SCREW	5/16"-18NCX3/4"	2
MI-81200-37	PIN		1
MI-81200-38	SPRING		1
MI-81200-39	SPRING SEAT		1
MI-81200-40	BALL HANDLE	22*1/4"-20NC	1
MI-81200-41	OUT-FEED TABLE		1
MI-81200-42	GIB		2
MI-81200-43	FENCE BRACKET		1
MI-81200-44	FLAT WASHER	10X20X3.0T	1
MI-81200-45	FLAT WASHER	10.5X28X3.0T	1
MI-81200-46	CAP SCREW	3/8"-16NCX1-1/2"	2
MI-81200-47	GUIDE BAR	3/8" X 3/8" X 225	1
MI-81200-48	SPRING PIN	4X20	1
MI-81200-49	BOLT	3/8"-24NFX89MM	2
MI-81200-50	LOCK WASHER	10.2X18.5	5
MI-81200-51	BEARING HOUSING		1
MI-81200-52	BEARING	6202-2NSE	1
MI-81200-53	KNIFE		3
MI-81200-54	CUTTER HEAD		1

PARTS LIST FOR MI-81200

ITEM NO.	DESCRIPTION	SPECIFICATION	QTY
MI-81200-55	COUNTERSUNK SCREW	M5X0.8PX12	6
MI-81200-56	KNIFE LOCK BAR		3
MI-81200-57	KNIFE LOCK SCREW		12
MI-81200-58	KEY	5X5X25	1
MI-81200-59	BEARING	6203-2NSE	1
MI-81200-60	BEARING HOUSING		1
MI-81200-61	CUTTER HEAD PULLEY		1
MI-81200-63	FENCE BODY		1
MI-81200-64	COUNTERSUNK SCREW	5/16"-18NCX1-5/8"	1
MI-81200-65	FENCE HANDLE ASSEMBLY		1
MI-81200-65-1	HANDLE SHAFT		1
MI-81200-65-2	HANDLE KNOB		1
MI-81200-66	FENCE LINKAGE		2
MI-81200-67	HEX NUT	1/2"-20NF (19.05BX6.35H)	2
MI-81200-68	BLOCK		1
MI-81200-69	BLOCK		1
MI-81200-70	BOLT		1
MI-81200-71	LOCK NUT		1
MI-81200-72	SPRING PIN	4X12	2
MI-81200-73	HEX. HEAD BOLT		1
MI-81200-74	STOP PLATE		1
MI-81200-75	FLAT WASHER	13X28X3.0T	2
MI-81200-76	FENCE LOCKING HANDLE		2
MI-81200-77	STOP PLATE		1
MI-81200-78	HEX. NUT	7/16"-14NC (17.4BX9.52H)	1
MI-81200-79	HEX. NUT	5/16"-18NC (12.7BX6.75H)	41
MI-81200-80	HEX. HEAD BOLT	5/16"-18NCX1-3/4"	1
MI-81200-81	LINKAGE		1
MI-81200-82	SWIVEL BLOCK		1
MI-81200-83	HEX. NUT	5/8"-18NF (23.81BX8H)	1
MI-81200-84	SPACER		1
MI-81200-85	HEX. NUT	3/8"-16NC (14.2BX8.33H)	4
MI-81200-86	SCREW		4
MI-81200-87	LINK PLATE		1
MI-81200-88	FENCE SLIDE BLOCK		1
MI-81200-89	HEX. HEAD BOLT	5/16"-18NCX1"	1
MI-81200-90	PLATE		1
MI-81200-91	FLAT WASHER	6.6X13X1.0T	2
MI-81200-92	PHILLIPS HEAD SCREW	1/4"-20NCX1/2"	2
MI-81200-93	PULLEY COVER		1
MI-81200-96	PUSH BLOCK STORAGE BRACKET		4
MI-81200-97	PUSH BLOCK		2
MI-81200-100	KNOB		1
MI-81200-101	DOOR LATCH		1
MI-81200-102	HEX. NUT	3/8"-16NC(14.2BX8.33H)	1
MI-81200-103	10-076	DUST PORT	1
MI-81200-104	FLANGE BOLT (ITEM #10-076)	3/8"-16NCX3/4"	3
MI-81200-105	STAND		1
MI-81200-106	DOOR		1
MI-81200-107	CORD RETAINER	SB7R-1	1

PARTS LIST FOR MI-81200

ITEM NO.	DESCRIPTION	SPECIFICATION	QTY
MI-81200-108	POWER CORD		1
MI-81200-109	V BELT	A36	1
MI-81200-110	MOTOR PULLEY		1
MI-81200-111	HEX. HEAD BOLT	5/16"-18NCX3/4"	4
MI-81200-112	FLAT WASHER	8.5X23X2.0T	8
MI-81200-113	MOTOR	1HPX110/220VX60HZX1PHX2P	1
MI-81200-114	LOCK WASHER	8.2X15.4	4
MI-81200-115	FLAT WASHER	4.3X10X1.0T	4
MI-81200-116	PHILLIPS HEAD SCREW	1/8"-40NCX3/8"	4
MI-81200-117	MOTOR WIRE	SJT16AWGX3CX700MM	1
MI-81200-118	SWITCH ASSEMBLY		1
MI-81200-118-1	SWITCH PAD		1
MI-81200-118-2	SWITCH FRONT COVER		1
MI-81200-118-3	SWITCH BODY		1
MI-81200-118-4	SWITCH BACK COVER		1
MI-81200-118-5	PHILLIPS HEAD SCREW	M4X0.7PX25	2
MI-81200-119	KNIFE SETTING GAUGE BLOCK		2
MI-81200-120	E RING	ETW-9	4
MI-81200-121	KNIFE GAUGE BAR		1
MI-81200-124	KEY	5X5X30	1
MI-81200-125	ALLEN KEY	3MM	1
MI-81200-126	OPEN WRENCH	8 -10 MM	1
MI-81200-127	OPEN WRENCH	12 -14 MM	1
MI-81200-128	KNIFE SETTING GAUGE ASS'Y		1
MI-81200-129	SPRING		6
MI-81200-130	FLAT WASHER	4.3*10*1.0t	1
MI-81200-131	SET SCREW	1/4"-20NC*3/4"	2
MI-81200-132	HEX. NUT	1/4"-20NC(11B*5.5H)	2
MI-81200-133	PIN	3*20	1
MI-81200-134	STEEL PIN		1

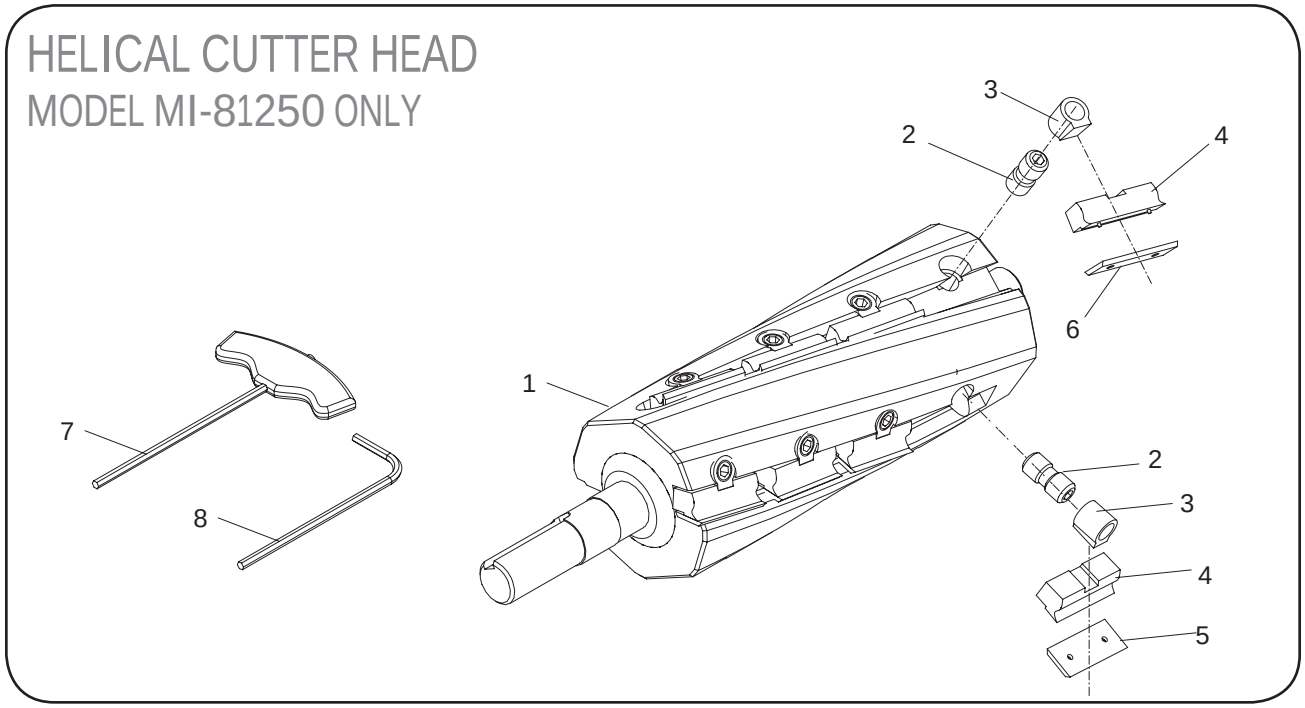

PARTS LIST FOR MI-81250

ITEM NO.	DESCRIPTION	SPECIFICATION	QTY
MI-81250-01	CUTTER HEAD		1
MI-81250-02	SCREW		16
MI-81250-03	NUT		16
MI-81250-04	KNIFE-HOLDER / CHIP-BREAKER		16
MI-81250-05	CARBIDE INSERT (STANDARD)	30 X 12 X 1.5MM (T)	14
MI-81250-06	CARBIDE INSERT (RABBETING)	30 X 12 X 1.5MM (T)	2
MI-81250-07	T HANDLE ALLEN KEY	5MM	1
MI-81250-08	ALLEN KEY	5MM	1